JE1816D8U
Single Bowl Undermount

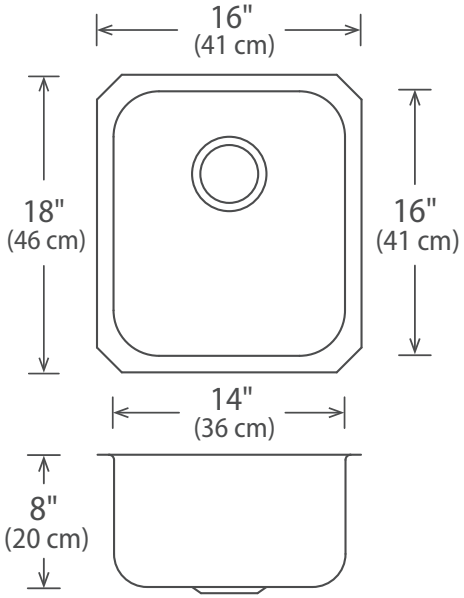

Features

- Brushed Satin Finish
- 18 gauge
- 18” x 16” x 8”
- Minimum Cabinet Size: 18” (46 cm)
- Sound Deadening Pads

All Novanni Elite sinks with a 3½” drain opening include an all metal stainless steel strainer. The distinctive Novanni crumb cup with snowflake pattern features a conical design with a superior tight seal. A metal tailpiece is included.

Novanni Elite sinks have less tapered corners on the sink bottom to allow for more usable space.

In keeping with our policy of continuing product improvement, Novanni Stainless Inc. reserves the right to change product specifications without notice.
Novanni Stainless Inc. 2978 Southorn Rd., PO Box 189, Coldwater, ON L0K 1E0
Tel: 1-800-661-1795 Fax: 905-465-9865 www.novanni.ca